MAINTENANCE

REMOVE FILTER SCREEN WASH WITH WATER AND REPLACE.

THE PRIMARY (200 MICRON) FILTER BAG ATACHMENT POINT IS THE INLET DEFLECTOR.
AFTER FILTER BAG IS CLEANED, ATACHMENT MUST BE POINTING THE SAME WAY AS SHOWN FOR WET USE.
TO CLEAN FILTER BAG, REMOVE FROM CANASTER AND EMPTY OUT BAG, RINSE WITH WATER AND REPLACE.

INLET DEFLECTOR

SET VAC HOSE & WORMGEAR CLAMP .3/16" TO 1/4" ABOVE DECK TO ALLOW HEIGHT ADJUSTMENT.

IF SKIRT GETS VACUUM SEALED TO GROUND REGULARLY, INSERT WASHER(SHIM) BETWEEN DECK AND FRONT CASTERS TO RAISE SKIRT HEIGHT APPROXIMATELY 1/16" FROM GROUND.

TO EXTEND CASTER LIFE,REMOVE O-RING FROM BEARING SWIVEL MOUNT AND ADD MARINE GRADE GREASE, REPLACE O-RING.

REPLACE SPRAY NOZZLE REGULARLY.

IF DECK VIBRATES WHILE OPERATING, IT WILL INDICATE THAT THERE IS EITHER A CLOGGED NOZZLE, OR THE ROTATING ARM IS DAMAGED, OR OUT OF BALANCE. CHECK NOZZLE, OR REPAIR/REPLACE SPRAY ARM. CONTINUED OPERATION WHEN ARM IS OUT OF BALANCE WILL DAMAGE THE SWIVEL AND BEARINGS.

ANT22 HYDRO VACUUM

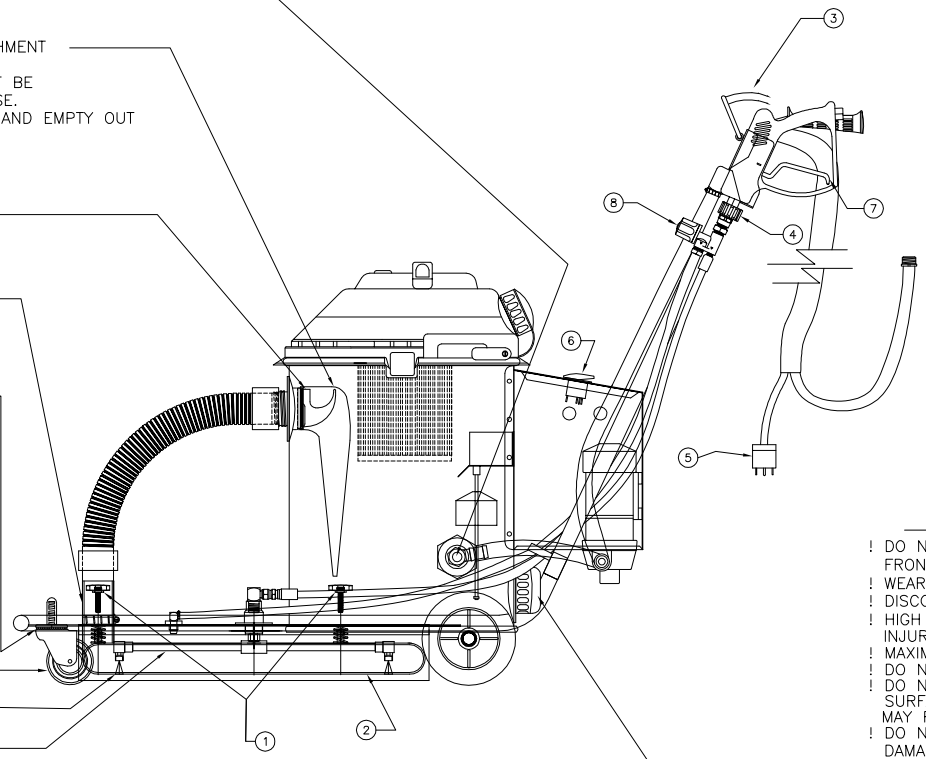

DRAIN WATER FROM CANISTER AFTER EACH USE.

OPERATION

1. ADJUSTMENTS FOR VAC TUBE. PLACE ANT22 ON FLAT SURFACE, LOOSEN ADJUSTMENT BOLTS UNTIL THEY ARE OFF OF THE DECK, TURN KNOB UNTIL YOU FEEL TENSION, THEN GIVE ONE TO TWO COMPLETE TURNS.
2. ADJUST HEIGHT OF VAC TUBE 1/16" TO 1/8" FROM THE GROUND FOR MAXIMUM PICKUP. VAC TUBE SHOWN NOT SCRAPPING THE GROUND ON A FLAT SURFACE.
3. PLACE GUN IN GUN BRACKET, SWING LATCH OVER GUN TO SECURE.
4. CONNECT PRESSURE WASHER TRIGGER GUN TO HIGH PRESSURE HOSE ON THE SURFACE CLEANER. USE THE TWIST COUPLER, COUPLER CONNECTS ON THE HYDRO VACUUM HANDLE. CONNECT GARDEN HOSE ADAPTER ON DISCHARGE HOSE.
5. CONNECT HYDRO VACUUM TO POWER SUPPLY (115 VAC). 15 AMP OR 2.9 KW GENERATOR. WARNING: GFCI PROTECTED OUTLET ONLY.
6. TURN AUTOMATIC PUMPOUT SYSTEM ON.
7. PULL TRIGGER AND MOVE THE HYDRO TWISTER OVER SURFACE TO BE CLEANED. DO NOT LEAVE RUNNING IN ONE SPOT. DAMAGE TO THE SURFACE CAN OCCUR WITH IMPROPER USE.
8. IF EQUIPPED WITH ADJUSTABLE PRESSURE, OPEN VALVE ON HANDLE TO DESIRED PRESSURE FOR YOUR APPLICATION.

WARNINGS

! DO NOT PLACE HANDS OR OTHER OBJECTS UNDER THE COVER OR IN FRONT OF SPRAY NOZZLES!
! WEAR SAFTY GLASSES & PROTECTIVE FOOTWEAR!
! DISCONNECT PRESSURE SUPPLY WHEN SERVICING!
! HIGH PRESSURE SPRAY CAN PENETRATE THE SKIN AND CAUSE INJURY-STAY CLEAR!
! MAXIMUM RATING 4000 PSI, 200 DEGREES F!
! DO NOT LIFT UP COVER WHILE OPERATING!
! DO NOT MOVE COVER OVER PROTRUDING OBJECTS OR UNEVEN SURFACES. DAMAGE TO THE SPRAY ARM AND PERSONAL INJURY MAY RESULT!
! DO NOT RUN IF SPRAY ARM IS OUT OF BALANCE OR BENT, DAMAGE TO SWIVEL WILL RESULT AND IS NOT COVERED UNDER WARRANTY!!
! DO NOT OPERATE WHEN FLAMMABLE MATERIALS OR VAPORS ARE PRESENT.
! DO NOT USE FOR HAZARDOUS MATERIALS PUMPING.

⚠WARNING RISK OF ELECTROCUTION

! CONNECT ONLY TO PROPERLY GROUNDED GFCI OUTLET. DO NOT REMOVE GROUND PIN.
! KEEP ALL CONNECTIONS DRY AND OFF OF THE GROUND.
! READ INSTRUCTION MANUAL BEFORE USING.
! INSPECT CORD BEFORE EACH USE - DO NOT USE IF CORD IS DAMAGED.
! DO NOT TOUCH PLUG WITH WET HANDS.

NOTES Hydro Tek Sys. retains rights to this drawing. The drawing and/or its contents may not be reproduced without written permission from Hydro Tek Sys., Inc.

TOLERANCES UNLESS OTHERWISE SPECIFIED

.000 = ±.005
.00 = ±.010
.0 = ±.015
FRAC = ±1/32"
ANG = ±1°

FINISH

REVISIONS:

DATE:	ECO:	REV:	DATE:	ECO:	REV:
08-08-05	1747	A			
09-01-05	1776	B			

HYDRO TEK
HYDRO TEK SYSTEMS, INC.
10418 ENTERPRISE DRIVE
REDLANDS, CA 92374
PH.(909)799-9222 FAX(909)799-9888

DRAWING: ANT22 ADJUSTMENTS
DRAWING NUMBER:
SCALE: NONE DATE: 02-18-04
DRAWN BY: MICHAEL SLANEY REV. BY: M.P.S
APPROVED BY:

MATERIALS REQUIRED:

NO	QTY	DESCRIPTION:			