HD PROLINE

04-21-06

EFFECTIVE S/N 200600560

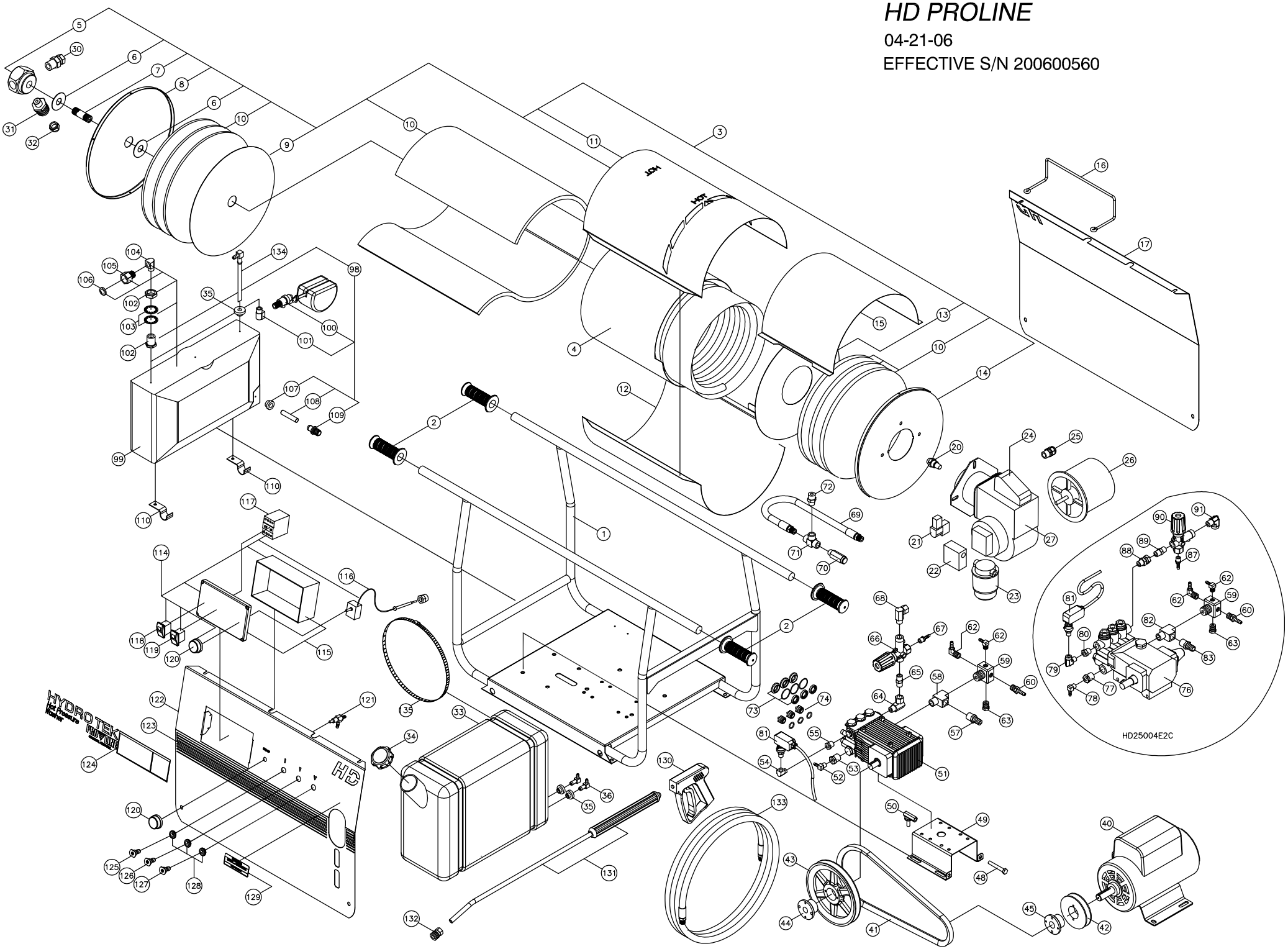

HD PROLINE PARTS LIST

04-21-06 EFFECTIVE SN 200600560

1	HHD00	HD FRAME STAINLESS	ALL
2	HL010	HAND GRIP 1in MX	ALL
3	BC221	COIL ASM 1PK SCH 80 HG SERIES	ALL
4	BC224	COIL REPLACMENT-HD,HG,SM,CPL,HJ SERIES	ALL
5	HHA01	HEX MANI OUTLET 1/2 x 1/2 x REEL	ALL
6	FW225	WASHER 2.25in OD 16GA STAINLESS STEEL	ALL
7	BC830	BURNER NIPPLE 1/2" x 3.00" SCH 80 BLK PIPE	ALL
8	B0003	HG COIL CAP 1 3/8" x 14.00"	ALL
9	BN127	DISC RETAINER 13.20" OD W/1.30" HOLE	ALL
10	BN053	INSUL BLKT 50SQ' 1/2 x 24 6# 25'	ALL
11	B0103	COIL WRAP TOP DUAL PASS H	ALL
12	B0104	COIL WRAP BOTTOM 14" HG/HD	ALL
13	BN105	DISC RETAINER 12.25"OD W/4.375" HOLE	ALL
14	B0004	HG COIL HEAD 4"id x 14" ASM	ALL
15	HHD05	HD/SM BURNER RAIN GUARD	ALL
16	HHP29	WIRE HOSE HOOK- ZINC PLATED	ALL
17	HHD31	HD REAR PANEL	ALL
20	BZ150	FUEL NOZZEL 1.5 80B	HD10003E1H,HD20004E2H,HD30003E2H
	BZ175	FUEL NOZZER 1.75 80B	HD25004E2H,HD25004E2C
21	BPV10	FUEL VALVE 120V	HD10003E1H
	BPV20	FUEL VALVE 220V	HD20004E2H,HD25004E2H,HD25004E2C,HD30003E2H
22	BPA10	FUEL PUMP MOD A2V-7116	ALL
23	BF020	FUEL FILTER RAYCOR HYDRO TEK	ALL
24	BMT15	IGNITION TRANSFORMER 115V BECKET	HD10003E1H
	BMT25	IGNITION TRANSFORMER -IRON CORE 240V BECKET	HD20004E2H,HD25004E2H,HD25004E2C,HD30003E2H
25	EWC08	STRAIN RELIEF 1/2" HEYCO (3/8)	ALL
26	BM556	BURNER MOTOR 115V BECKET H2G	HD10003E1H
	BM562	BURNER MOTOR 220V BECKET	HD20004E2H,HD25004E2H,HD25004E2C,HD30003E2H
27	BU605	BURNER, BECKET 115V HG	HD10003E1H
	BU602	BURNER , BECKET AFG 230V	HD20004E2H,HD25004E2H,HD25004E2C,HD30003E2H
30	DE568	SWIVEL 23/8"F x 1/2"M STEEL	ALL
31	UPB05	ADAPTER FITTING-BURST DISC	ALL
32	UPB80	BURST DISC 8000 PSI TORQUE 32-4	ALL
33	WT075	FUEL TANK 7.5 DIESEL CLEAR	ALL
34	WT080	FUEL CAP, DIESEL	ALL
40	ME205	MOTOR 2.0 HP 3450 C-FACE (MAGNETEK)	HD10003E1H
	ME504	MOTOR 5 HP 208/230 1PH 3450 MT	HD20004E2H
	ME606	MOTOR 6.5 HP 230V 1PH 3450 MT	HD25004E2H,HD25004E2C,HD30003E2H
41	KSB36	BELT BX36	HD10003E1H
	KSB32	BELT BX32	HD20004E2H
	KSB34	BELT BX34	HD25004E2H
	KSB38	BELT BX38	HD25004E2C,HD30003E2H
42	KT036	SHEAVE BK36H	HD10003E1H
	KT040	SHEAVE BK40H	HD20004E2H,HD25004E2H
	KT045	SHEAVE BK45H	HD30003E2H
	KT047	SHEAVE BK47H	HD25004E2C
43	KT080	SHEAVE BK80H	HD10003E1H,HD20004E2H,HD25004E2H
	KT105	SHEAVE BK105H	HD25004E2C,HD30003E2H
44	KSH09	BUSHING 5/8 H	HD10003E1H
	KSH12	BUSHING H 3/4	HD20004E2H,HD25004E2C,HD25004E2H,HD30003E2H
45	KSH19	BUSHING H24MM	HD10003E1H
	KSH12	BUSHING H 3/4	HD20004E2H,HD25004E2H,HD30003E2H
	KSH15	BUSHING Hx 16.5MM	HD25004E2C
48	FB641	BOLT 3/8" x 2.50" PLD ALLTHREAD	ALL
49	HHD03	HD PUMP SUPORT RAIL 14GA SS	ALL
50	HPR60	PUMP RAIL BOLT	ALL
51	PH316	PUMP 3@1600 24mm SHAFT HYDRO TEK	HD10003E1H
	PH331	PUMP 3@3000 3/4" SHAFT HYDRO TEK	HD20004E2H,HD25004E2H,HD30003E2H
52	D8040	HOASE BARB 1/4" 90 ELBOW	HD10003E1H,HD20004E2H,HD25004E2H,HD30003E2H
53	D1084	BUSHING 1/2" x 1/4" BRASS	HD10003E1H,HD20004E2H,HD25004E2H,HD30003E2H
54	D5544	STREET ELL 1/4" BRASS (COMPACT)	HD10003E1H,HD20004E2H,HD25004E2H,HD30003E2H
55	D1064	BUSHING 3/8" x 1/4" BRASS	HD10003E1H,HD20004E2H,HD25004E2H,HD30003E2H
57	D8072	HOSE BARB 5/8"H x 1/2"M .281id BLUE	HD10003E1H,HDA20004E2H,HD25004E2H
	D8070	HOSE BARB 5/8"H x 1/2"M .25id BLK	HD30003E2H
58	D6588	STREET TEE 1/2" BRASS	HD10003E1H,HD20004E2H,HD25004E2H,HD30003E2H
59	HHA05	MINI MAN IFOLD-BRASS	ALL
60	D8044	BARB, HOSE 1/4" BRASS	ALL
62	D8040	HOSE BARB 1/4" 90 ELBOW	ALL
63	D1040	PLUG 1/4" BRASS	ALL
64	DE866	SWIVEL 3/8"F x 3/8"M 90	HD10003E1H,HD20004E2H,HD25004E2H,HD30003E2H
65	DB506	NIPPLE 3/8" STEEL	HD10003E1H,HD20004E2H,HD25004E2H,HD30003E2H
66	UU260	UNLOADER, ST261 NO SWITCH	HD10003E1H,HD20004E2H,HD25004E2H,HD30003E2H
67	D8044	BARB, HOSE 1/4" BRASS	HD10003E1H,HD20004E2H,HD25004E2H,HD30003E2H
68	DE866	SWIVEL 3/8"F x 3/8"M 90	HD10003E1H,HD20004E2H,HD25004E2H,HD30003E2H
69	DH004	HOSE 3/8" x 18" 5000PSI	HD10003E1H,HD20004E2H,HD25004E2H,HD30003E2H
	DH002	HOSE 3/8" x 14" 5000PSI	HD25004E2C
70	UP120	PRESSURE RELIEF 2000psi ORANGE	HD10003E1H
	UP137	PRESSURE RELIEF 370psi BLACK	HD20004E2H,HD25004E2C,HD25004E2H,HD30003E2H
71	D6066	TEE 3/8" BRASS	HD10003E1H
	DE066	TEE 3/8" STEEL	HD20004E2H,HD25004E2C,HD25004E2H,HD30003E2H
72	D2086	NIPPLE 1/2" x 3/8" BRASS	HD10003E1H
	DB507	NIPPLE 3/8" x 1/2" STEEL	HD20004E2H,HD25004E2C,HD25004E2H,HD30003E2H
73	PHK06	SEAL KIT FOR PH316	HD10003E1H
	PHK36	PACKING KIT AR XMV PUMP	HD20004E2H,HD25004E2H,HD30003E2H
	PP983	SEAL KIT 3CP1120 PUMP	HD25004E2C
74	PHK34	VALVE KIT PH322 (2254BC) HYPRO	HD10003E1H,HD20004E2H,HD25004E2H,HD30003E2H
	PP899	VALVE KIT CAT 3CP1120	HD25004E2C
76	P4022	PUMP 3CP1120 4@ 2200	HD25004E2C
77	D1084	BUSHING 1/2" x 1/4" BRASS	HD25004E2C
78	D8040	HOSE BARB 1/4" 90 ELBOW	HD25004E2C
79	DC043	STREET ELL 1/4" FORGED	HD25004E2C
80	DA064	BUSHING 3/8" x 1/4"STEEL	HD25004E2C
81	VS030	PRESSURE SWITCH 4000 PA/PR16	ALL
82	D6588	STREET TEE 1/2" BRASS	HD25004E2C
83	D8090	HOSE BARB 5/8"H x 1/2"MPT	HD25004E2C
87	D8044	BARB, HOSE 1/4" BRASS	HD25004E2C
88	DE566	SWIVEL 3/8" STEEL	HD25004E2C
89	DB506	NIPPLE 3/8" STEEL	HD25004E2C
90	UU260	UNLOADER ST261 NO SWITCH	HD25004E2C
91	DC568	STREET ELL 3/8" STEEL	HD25004E2C
98	WT046	FLOAT TANK ASM W/VALVE SPECIFY	ALL
99	WT040	TANK, FLOAT 4 GAL HD LINEAR (NO HOLES)	ALL
100	VVF08	FLOAT VALVE 3/8" BRASS	ALL
101	D5566	STREET ELL 3/8" BRASS	ALL
102	D7520	PANEL FITTING 3/4" BRASS	ALL
103	FW700	WASHER LOCK 1in GALV	ALL
104	D5566	STREET ELL 3/8" BRASS	ALL
105	D006M	GARDEN HA 3/8" NPT MALE	ALL
106	D0021	SCREEN WASHER GARDEN HA	ALL
107	DFF10	WATER TANK BUSHING 5/8"	ALL
108	VF050	STRAINER TUBE FOR FLOAT TANK	ALL
109	DQF10	DISCONNECT BARB/TANK FITTING	ALL
110	HH310	FLOAT TANK HINGE (SSTEEL) ASM	ALL
114	EHD21	HD10003 BOXASSM 2HP 115V 1PH	HD10003E1H
	EHD62	HD PUMP BOX ASSM 6HP 230V 1PH	HD20004E2H,HD25004E2C,HD25004E2H,HD30003E2H
115	EWB06	ELECTL BOX 7.8 x 4.7 x 3.2 HOFMN	ALL
116	ECH50	THERMOSTAT 60-250 1 GP PART=25	ALL
117	ECC22	CONTACTOR 40AMP 120V 3 POLE	HD10003E1H
	ECC21	CONTACTOR 40AMP 240V 3 POLE DEF	HD20004E2H,HD25004E2C,HD25004E2H,HD30003E2H
118	EC411	ROCKER SWITCH 110V CLEAR	HD10003E1H
	EC421	ROCKER SWITCH 230V CLEAR	HD20004E2H,HD25004E2C,HD25004E2H,HD30003E2H
119	EC410	ROCKER SWITCH 110V RED	HD10003E1H
	EC420	ROCKER SWITCH 230V RED	HD20004E2H,HD25004E2C,HD25004E2H,HD30003E2H
120	ECH72	KNOB; RED .25 x 1.50OD	ALL
121	VVC10	CHEMICAL MET VALVE MV-100 MOD	ALL
122	HHD30	HD CONTROL PANEL	ALL
123	GLL72	PINSTRIPE MULTI RED (ROLLS=150')	ALL
124	GLL95	LABEL PROLINE 3.125 x 21" 2 COLORS	ALL
125	NQ550	NOZZEL/QDC 055 x 0	HD10003E1H
	NQ450	NOZZEL/QDC 045 x 0	HD20004E2H,HD25004E2H,HD25004E2C
	NQ300	NOZZEL/QDC 03 x 0	HD30003E2H
126	NQ552	NOZZEL/QDC 055 x 15	HD10003E1H
	NQ452	NOZZEL/QDC 045 x 15	HD20004E2H,HD25004E2H,HD25004E2C
	NQ302	NOZZEL/QDC 03 x 15	HD30003E2H
127	NQ453	NOZZEL/QDC 045 x 25	HD10003E1H
	NQ353	NOZZEL/QDC 035 x 25	HD20004E2H,HD25004E2H,HD25004E2C
	NQ253	NOZZEL/QDC 025 x 25	HD30003E2H
128	HLB09	NOZZEL GROMET HOLDER	ALL
129	GLL20	LABEL DIESEL FUEL ONLY	ALL
130	VG200	TRIGGER,GUN INSULATED 4000 PSI	ALL
131	VW036	WAND 1/4" x 36" MOLDED GRIP	ALL
132	DQ04S	COUPLER 1/4" SOCK FEM	ALL
133	DH050	HOSE 3/8" x 50' 3000 PSI	ALL
134	DF599	FUEL TANK ADAPTER W/PLASTIC TUBE	ALL
135	FC074	WORM GEAR CLAMP 2 1/2 x 13 1/4	ALL